OLDA 34 HZA - type 1 - automatic flush bolt

mounting guide - internal fitting

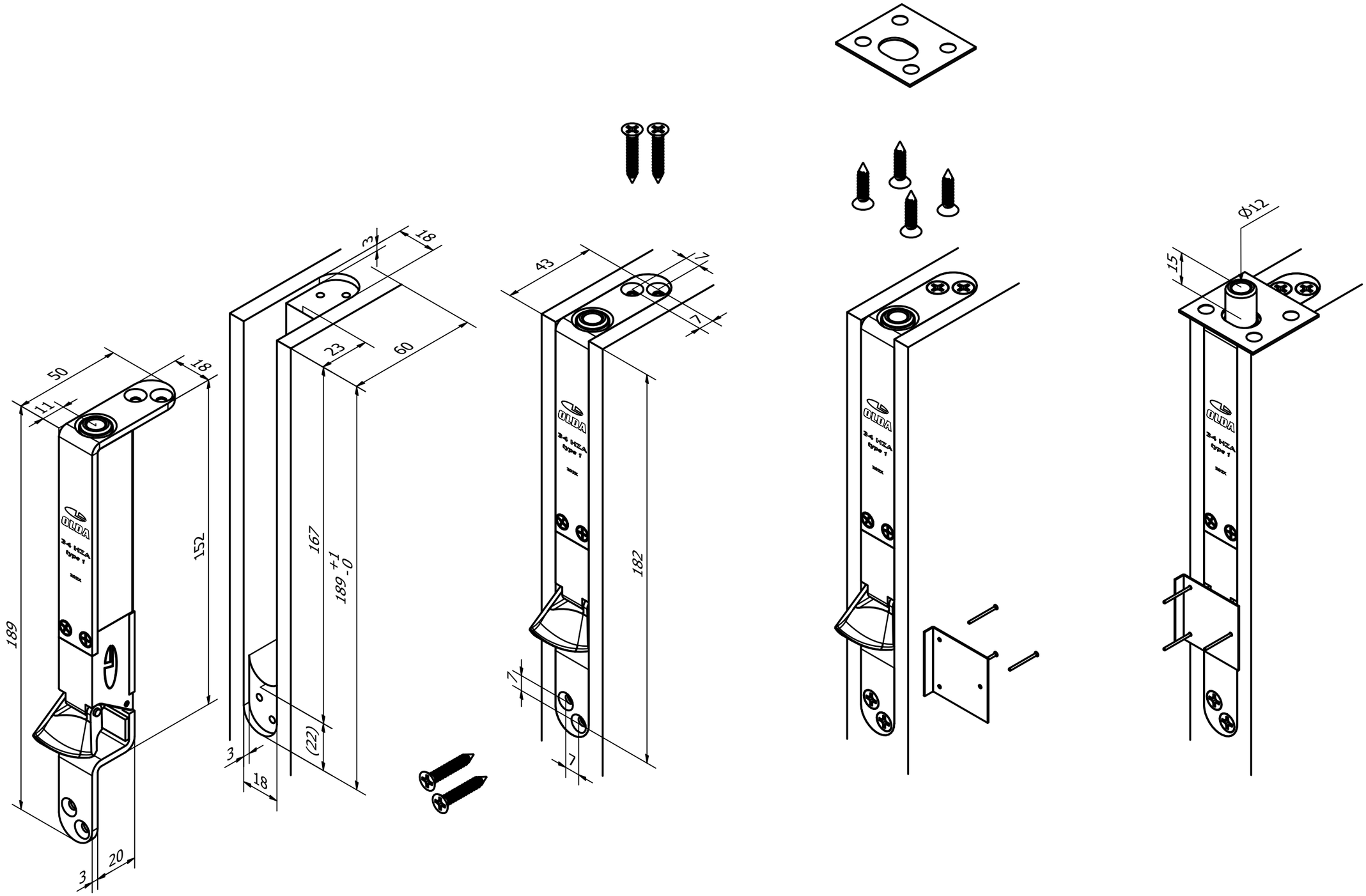

10-034-1000	C	2023-07-03

https://www.olda.com/en/fittings/automatic-flush-bolt-olda-34-hza/

OLDA®