OLDA 34 HZA-DS - type 1 - automatic flush bolt

dimension drawing

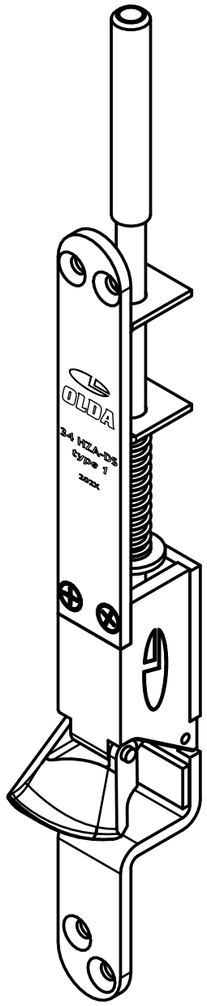

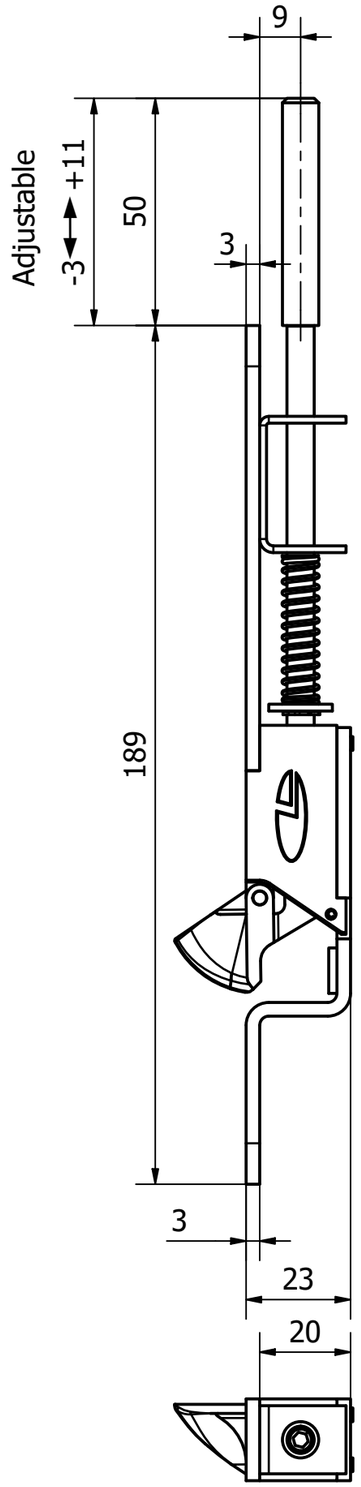

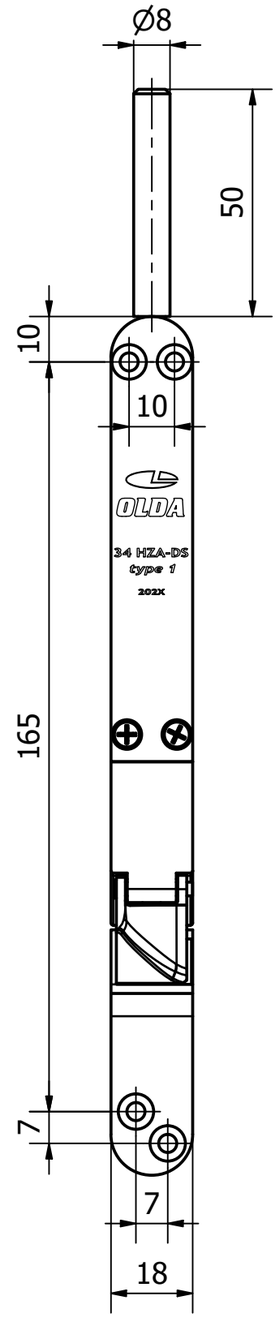

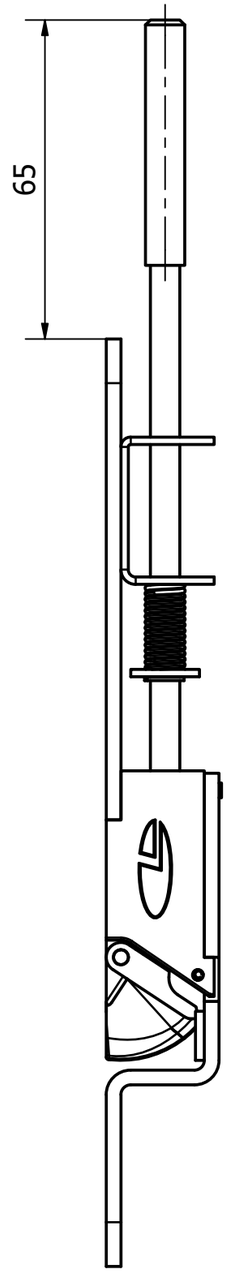

10-134-1000	C	2023-10-12

https://www.olda.com/en/fittings/automatic-flush-bolt-olda-34-hza-ds/

OLDA®