OLDA 33 HZM-R32 - manual flush bolt - bolt Ø12x60 mm

mounting guide - external fitting

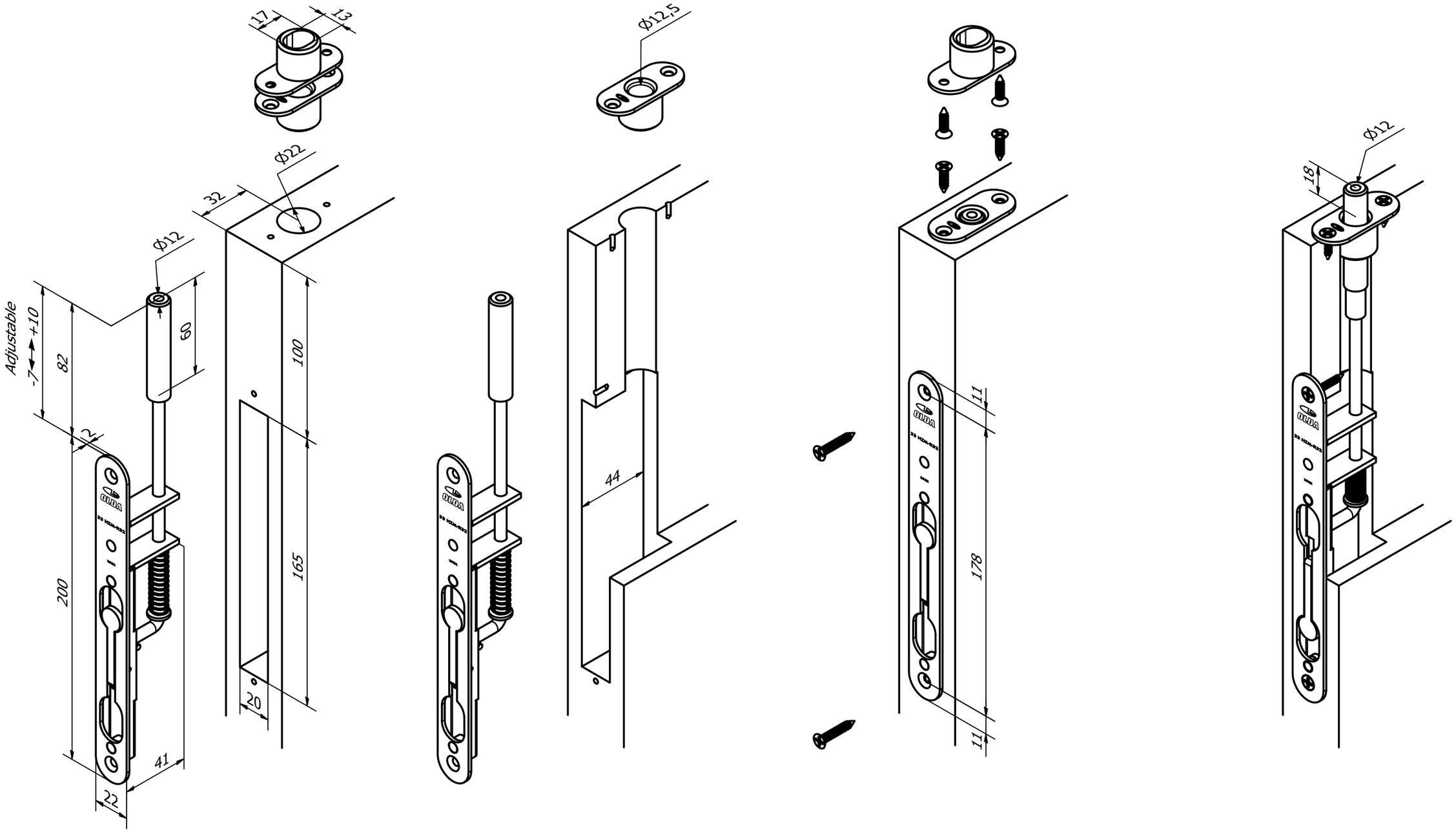

11-133-0011	A	2023-11-17

https://www.olda.com/en/fittings/manual-flush-bolt-olda-33-hzm-r32/

OLDA®