OLDA 31 HZA-C – type 2 – automatic flush bolt

mounting guide - internal fitting

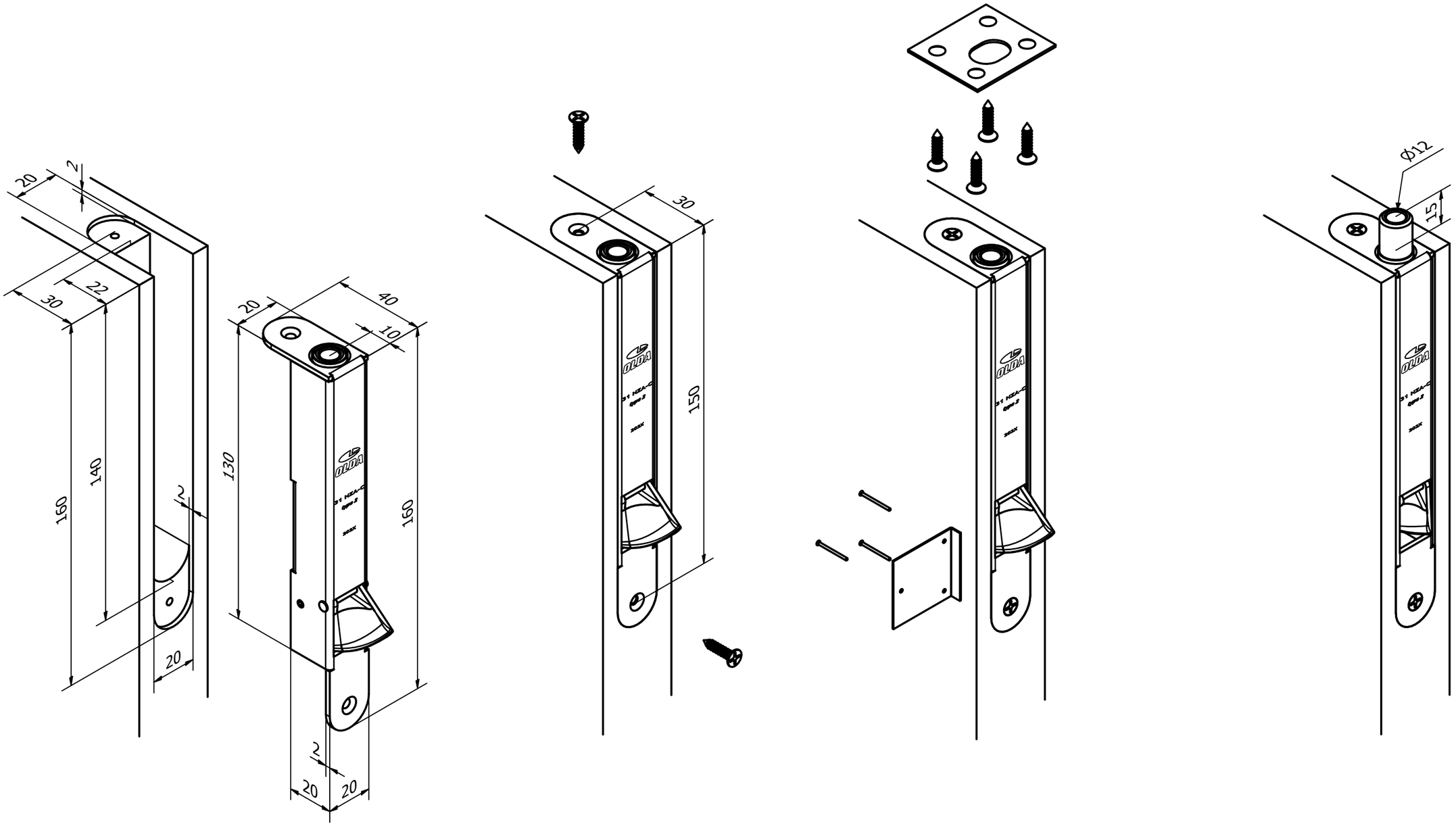

10-031-2003	C	2023-09-25

https://www.olda.com/en/fittings/automatic-flush-bolt-olda-31-hza-c