OLDA GT 8 (12) - Guide tube Ø 8,5 mm

mounting guide - <u>external</u> fitting

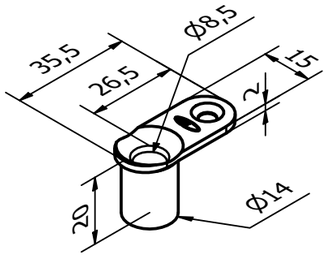

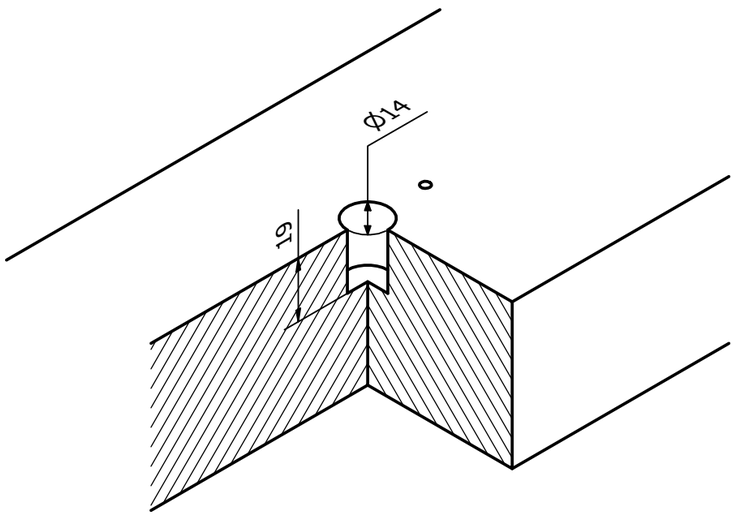

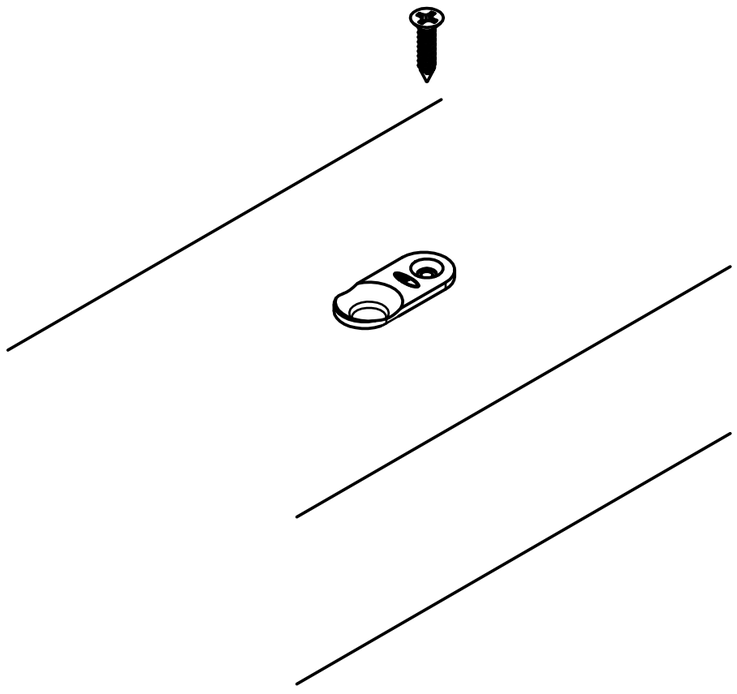

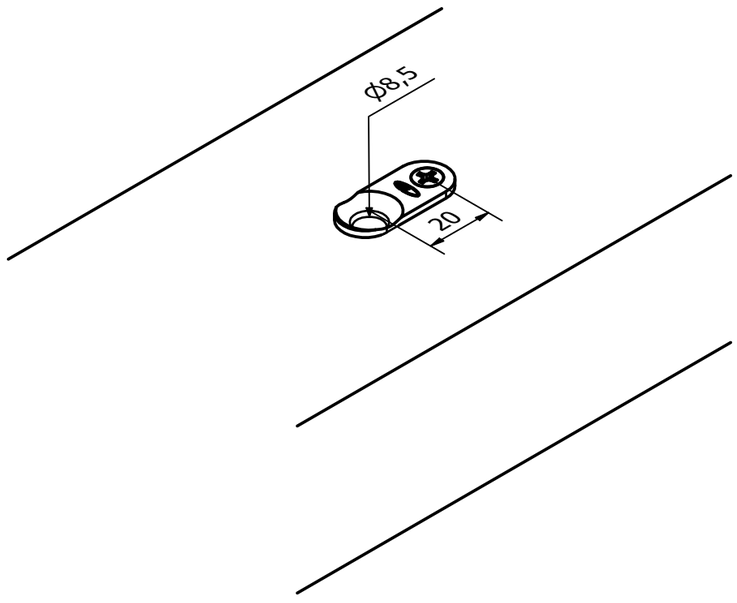

23-016-0801	A	2025-11-28

https://www.olda.com/en/fittings/guide-tubes-olda-gt/