OLDA GT 10 - Guide tube Ø 10,5 mm

dimension drawing

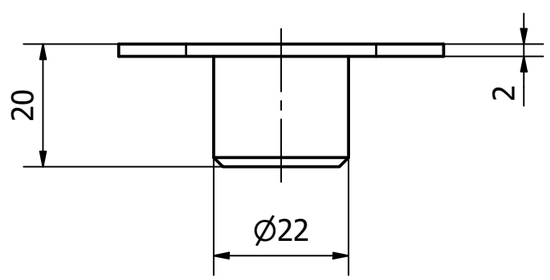

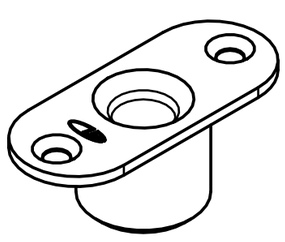

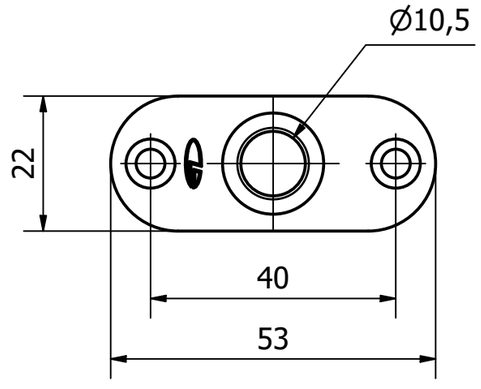

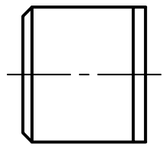

23-016-1000	C	2024-01-11

https://www.olda.com/en/fittings/guide-tubes-olda-gt/