# *OLDA 602 HZA - type 1 - automatic frame bolt*

**mounting guide - internal fitting**

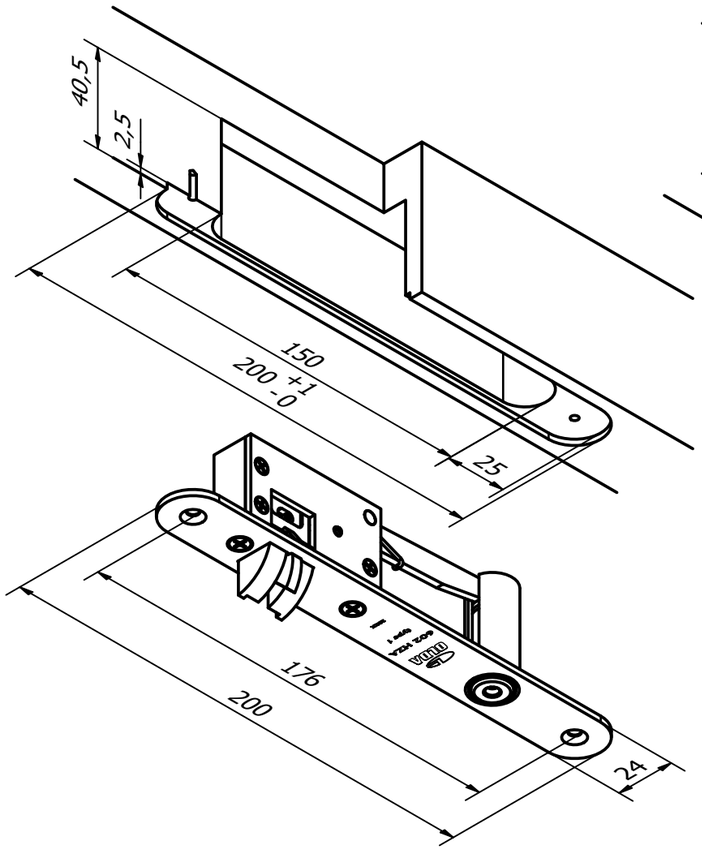


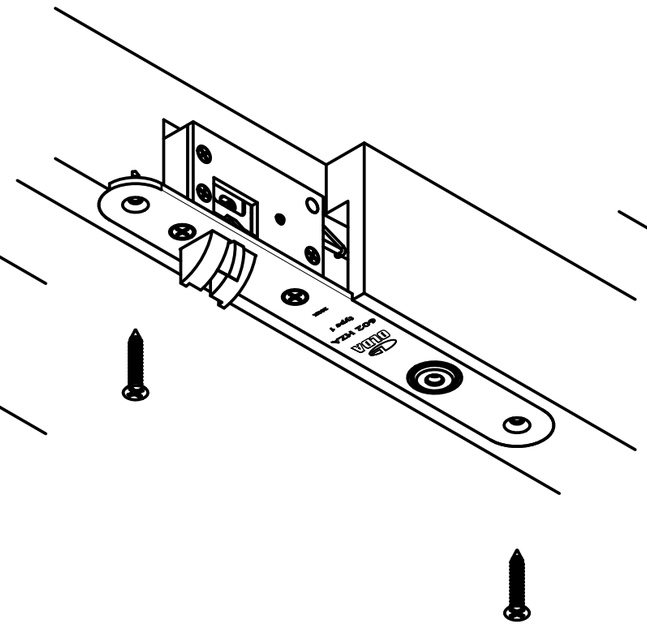

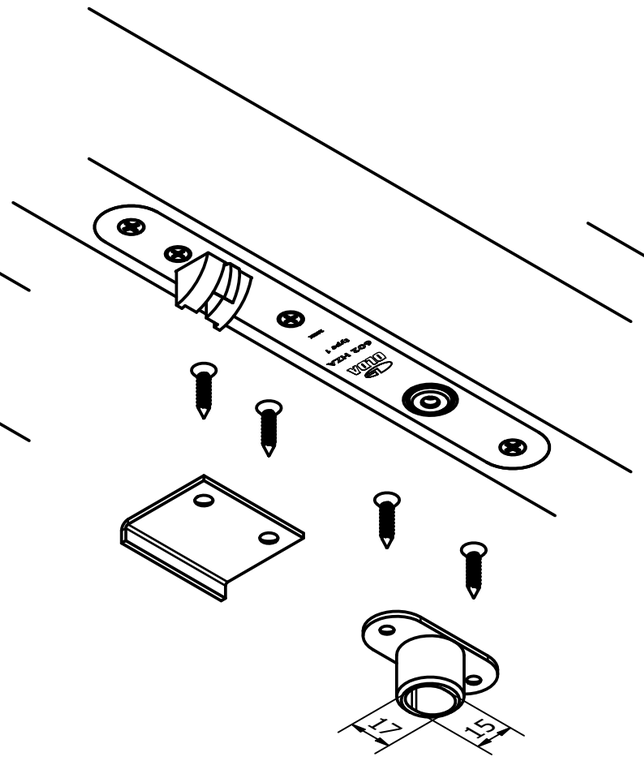


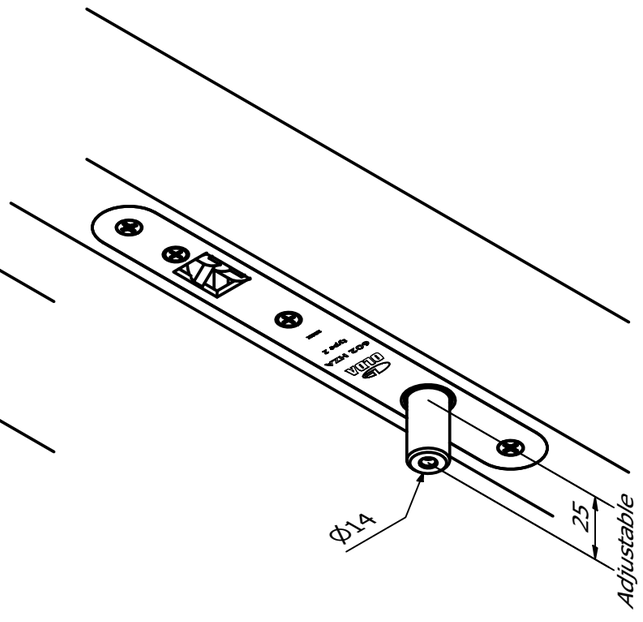


| | | |
|---|---|---|
| 10-602-1000 | A | 2023-06-26 |

https://www.olda.com/en/fittings/automatic-frame-bolt-olda-602-hza/

OLDA®