OLDA 34 HZA - type 2 - automatic flush bolt

mounting guide - external fitting

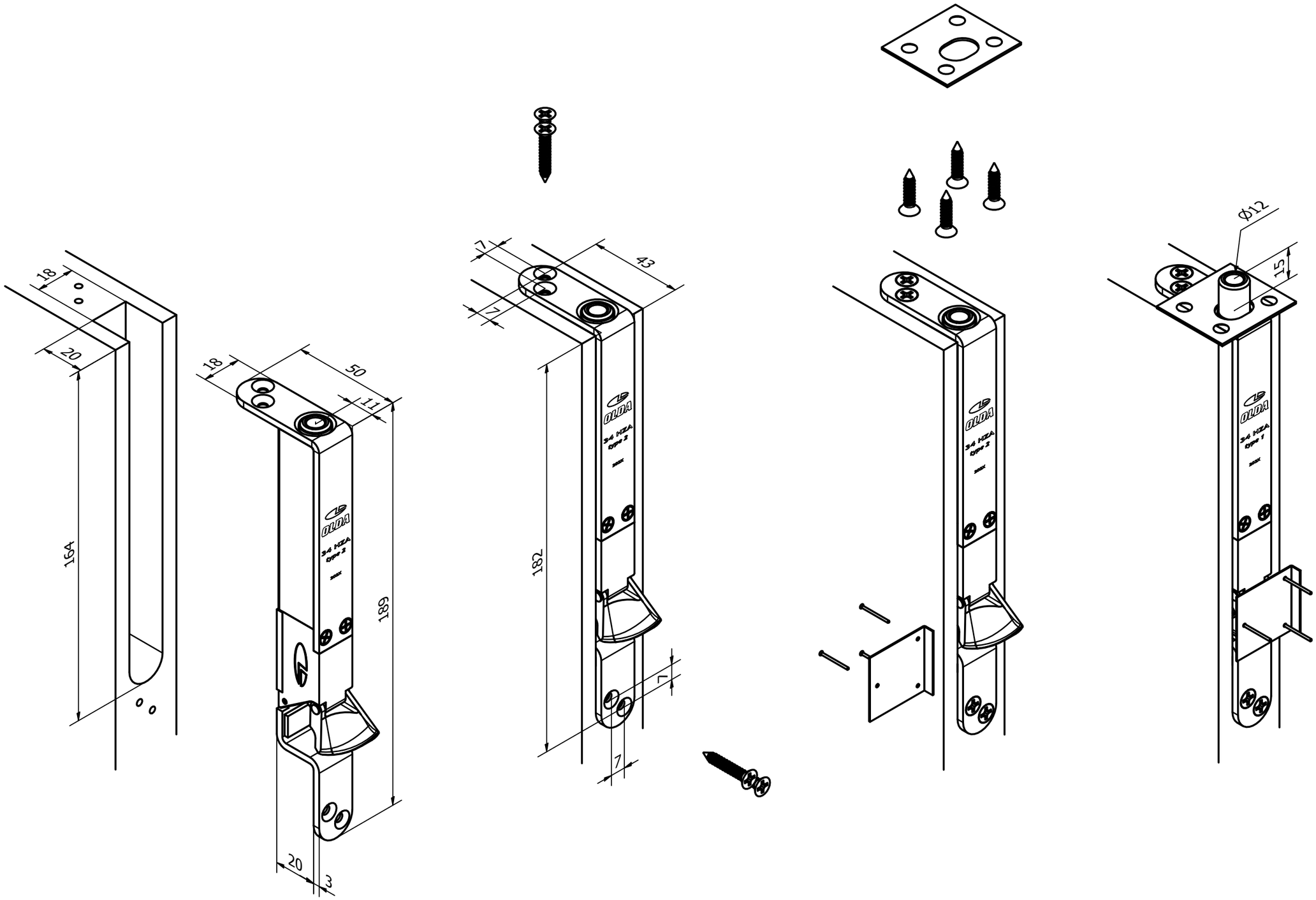

10-034-2000	C	2023-07-03

https://www.olda.com/en/fittings/automatic-flush-bolt-olda-34-hza/

OLDA®