OLDA 33 HZA-R32F - type 1 - automatic flush bolt - bolt Ø12x60 mm

mounting guide - internal fitting

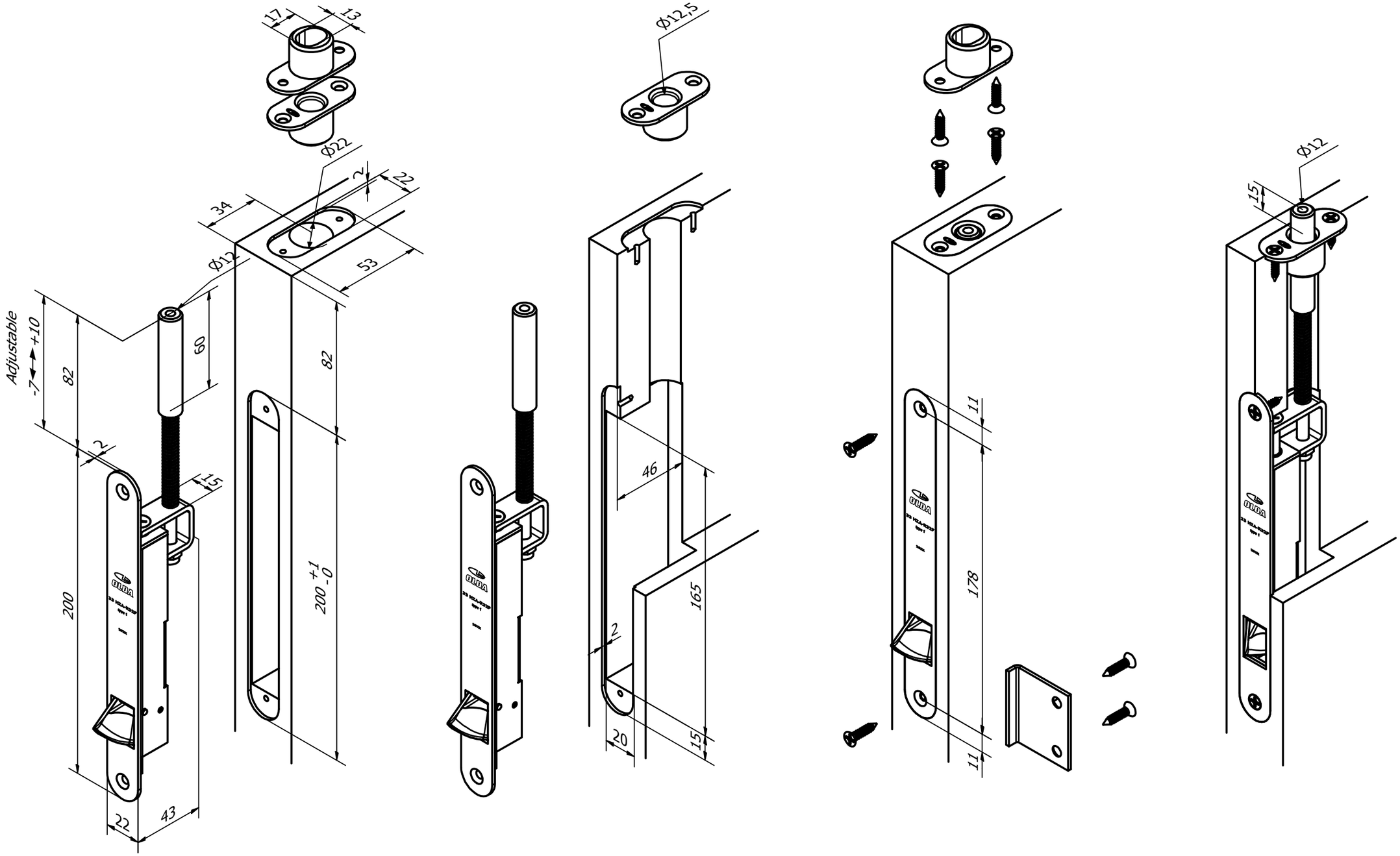

10-133-1011	C	2024-05-21

https://www.olda.com/en/fittings/automatic-flush-bolt-olda-33-hza-r32f/

OLDA®