OLDA 31 HZA-C – type 1 – automatic flush bolt

dimension drawing

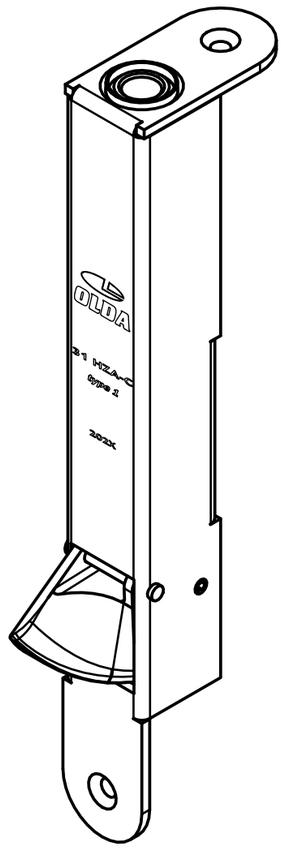

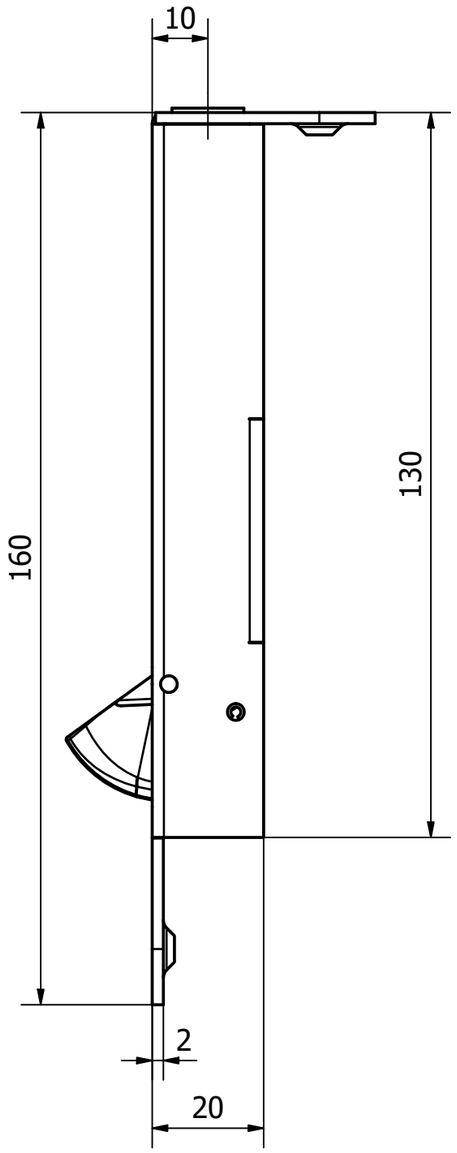

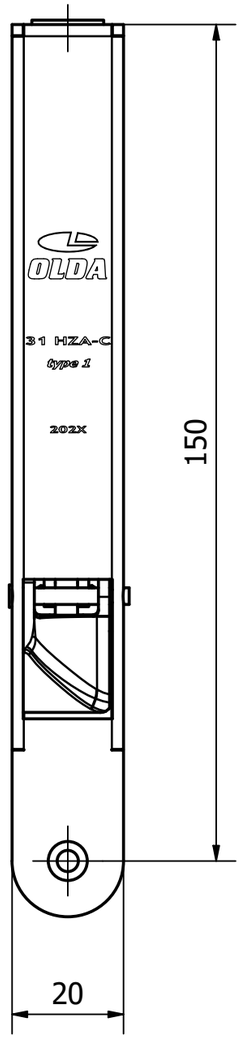

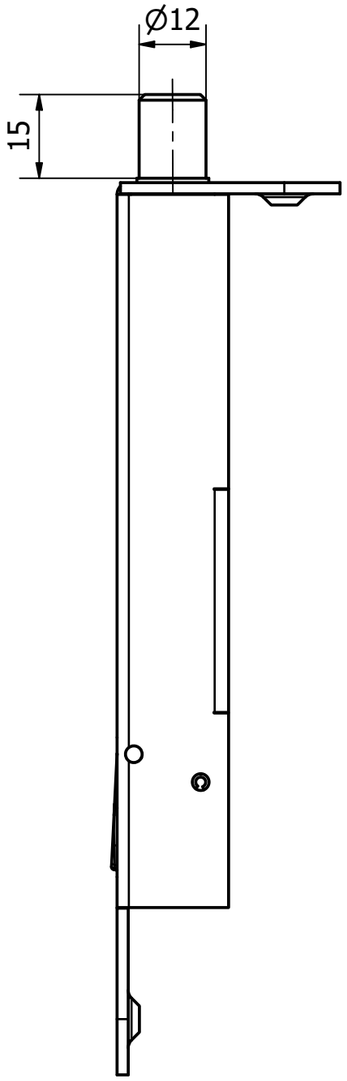

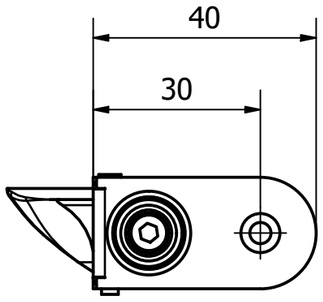

10-031-1003	C	2023-09-21

https://www.olda.com/en/fittings/automatic-flush-bolt-olda-31-hza-c

OLDA®