OLDA 30 HZM - manual flush bolt

mounting guide - external fitting

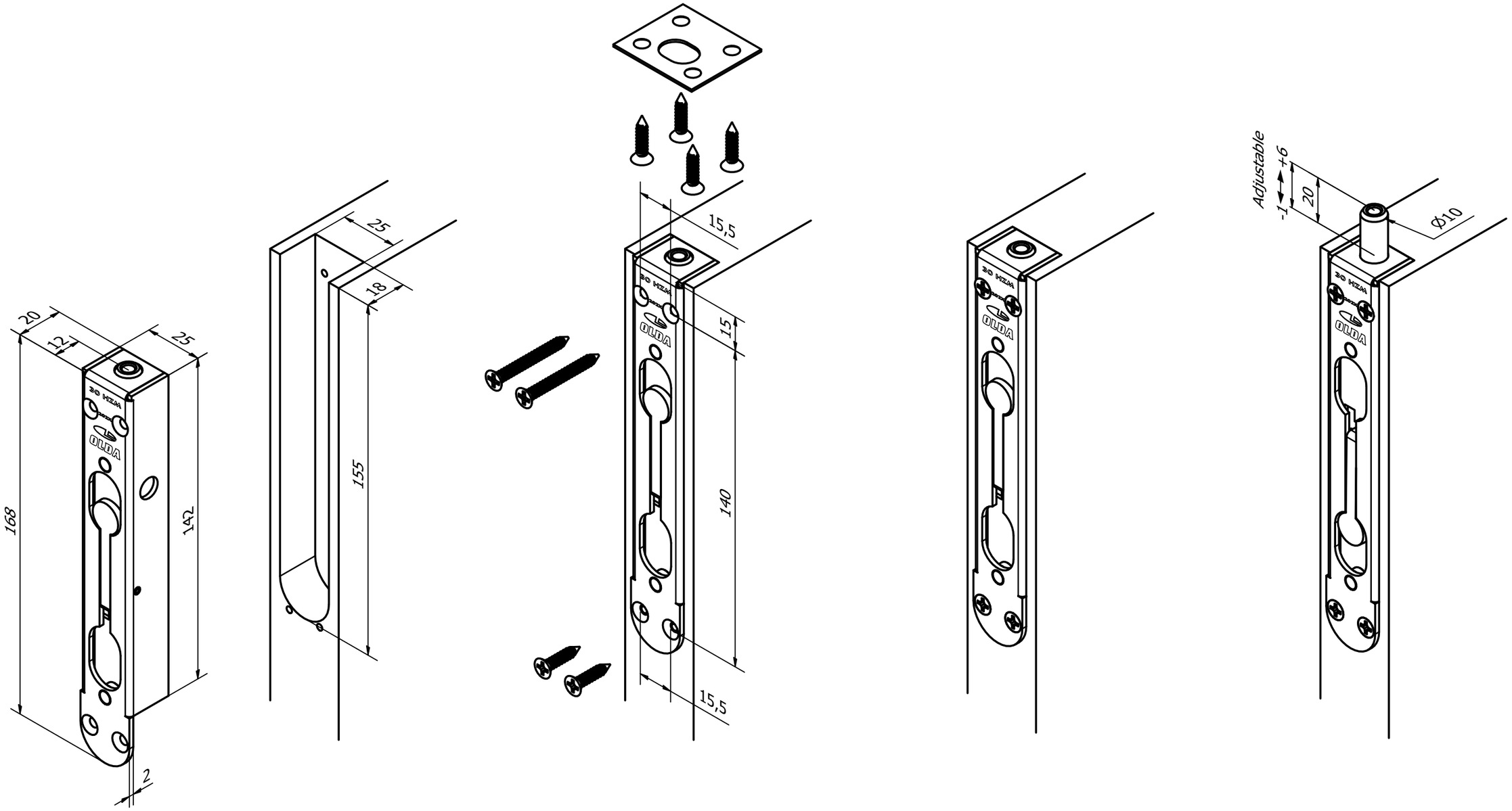

11-030-0000	B	2023-11-17

https://www.olda.com/en/fittings/manual-flush-bolt-olda-30-hzm/