# *OLDA 28 HZA - type 2 - automatic flush bolt - extended bolt +15 mm*

**mounting guide - external fitting**

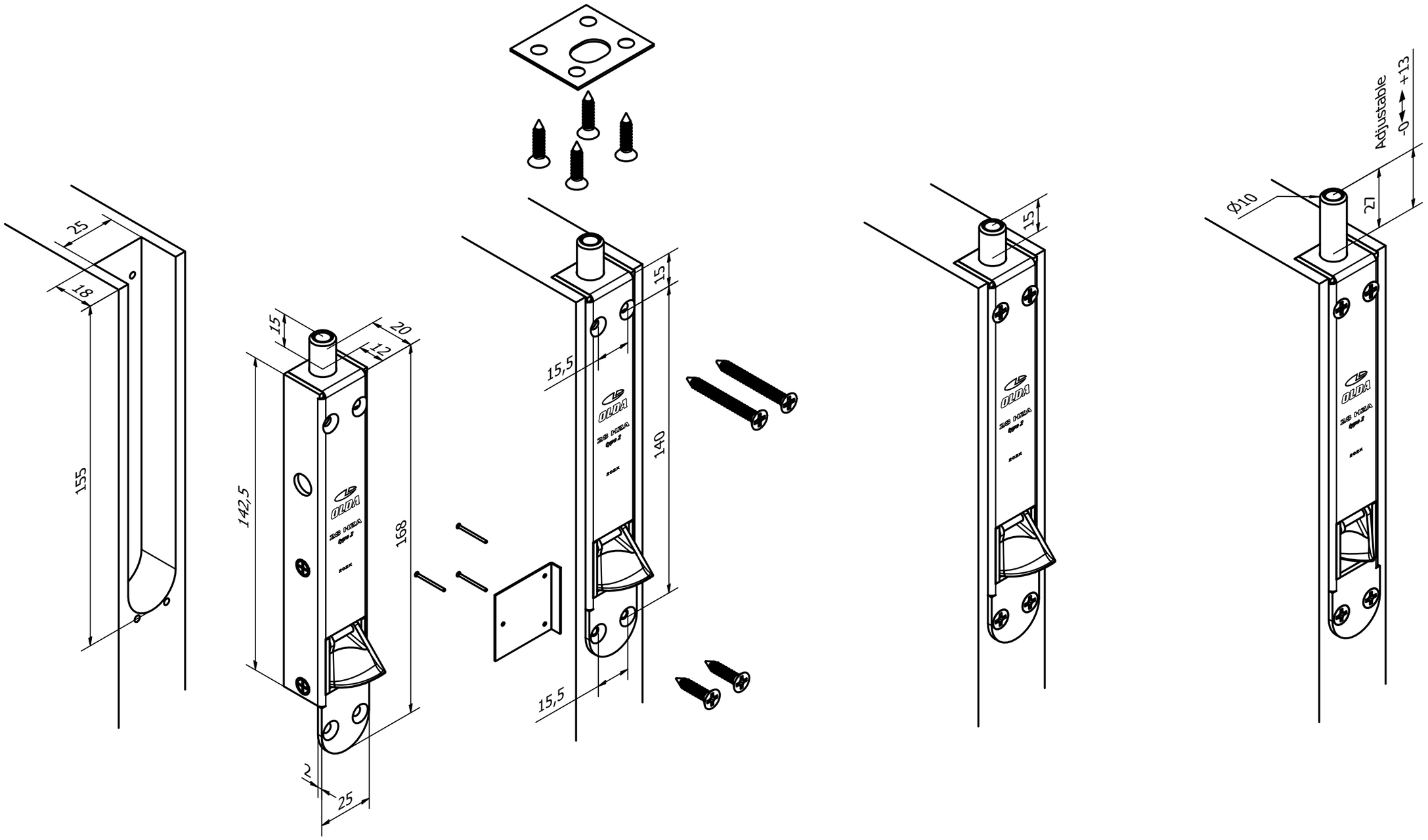


| | | |
|---|---|---|
| 10-128-2001 | A | 2023-11-10 |

https://www.olda.com/en/fittings/automatic-flush-bolt-olda-28-hza-extended-bolt/