OLDA 30 HZM - manual flush bolt - extended bolt +20 mm

mounting guide - internal fitting

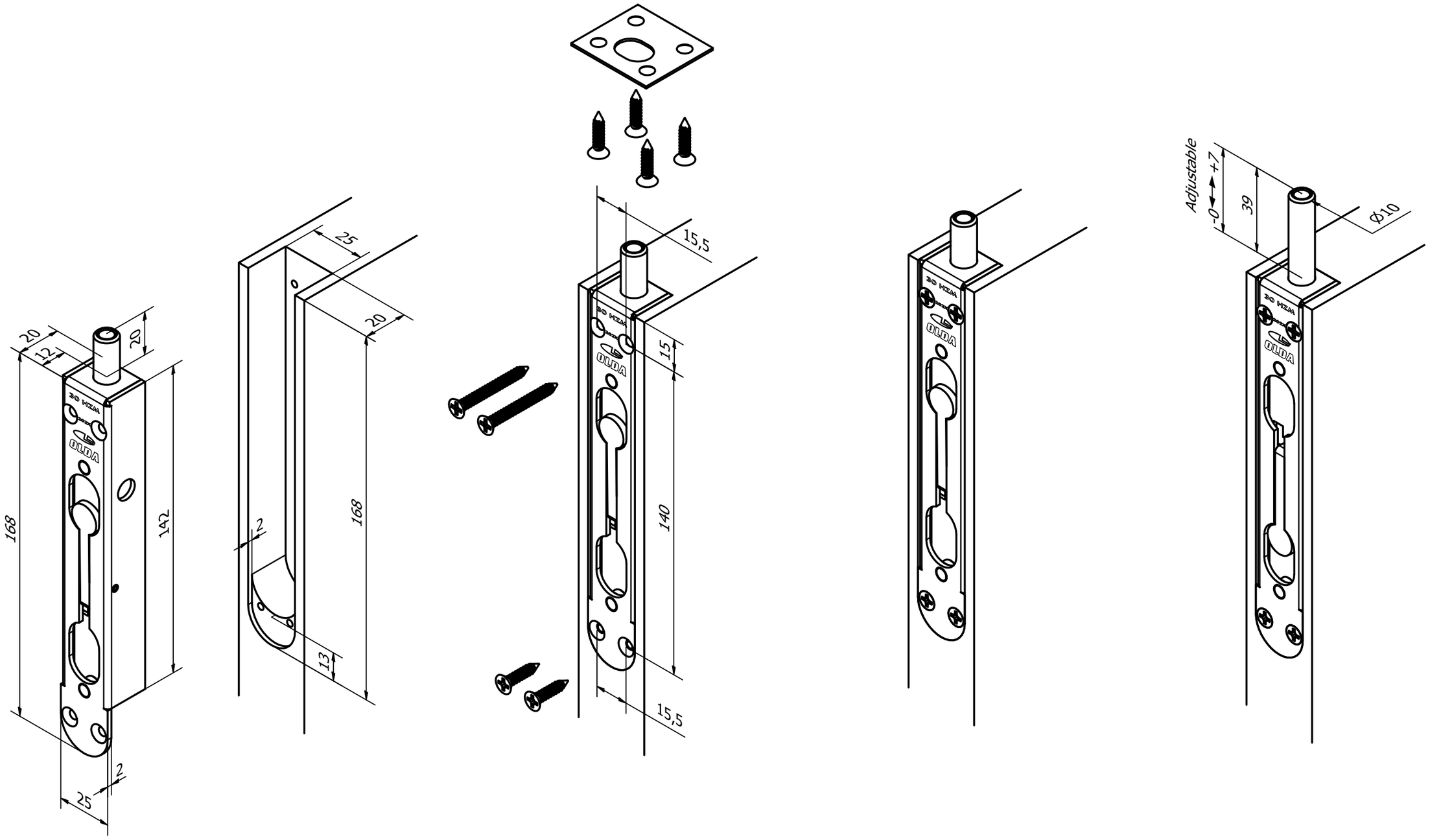

11-130-0004	B	2023-11-10

https://www.olda.com/en/fittings/manual-flush-bolt-olda-30-hzm-extended-bolt//