OLDA 28 HZA - type 2 - automatic flush bolt - extended bolt +30 mm

mounting guide - internal fitting

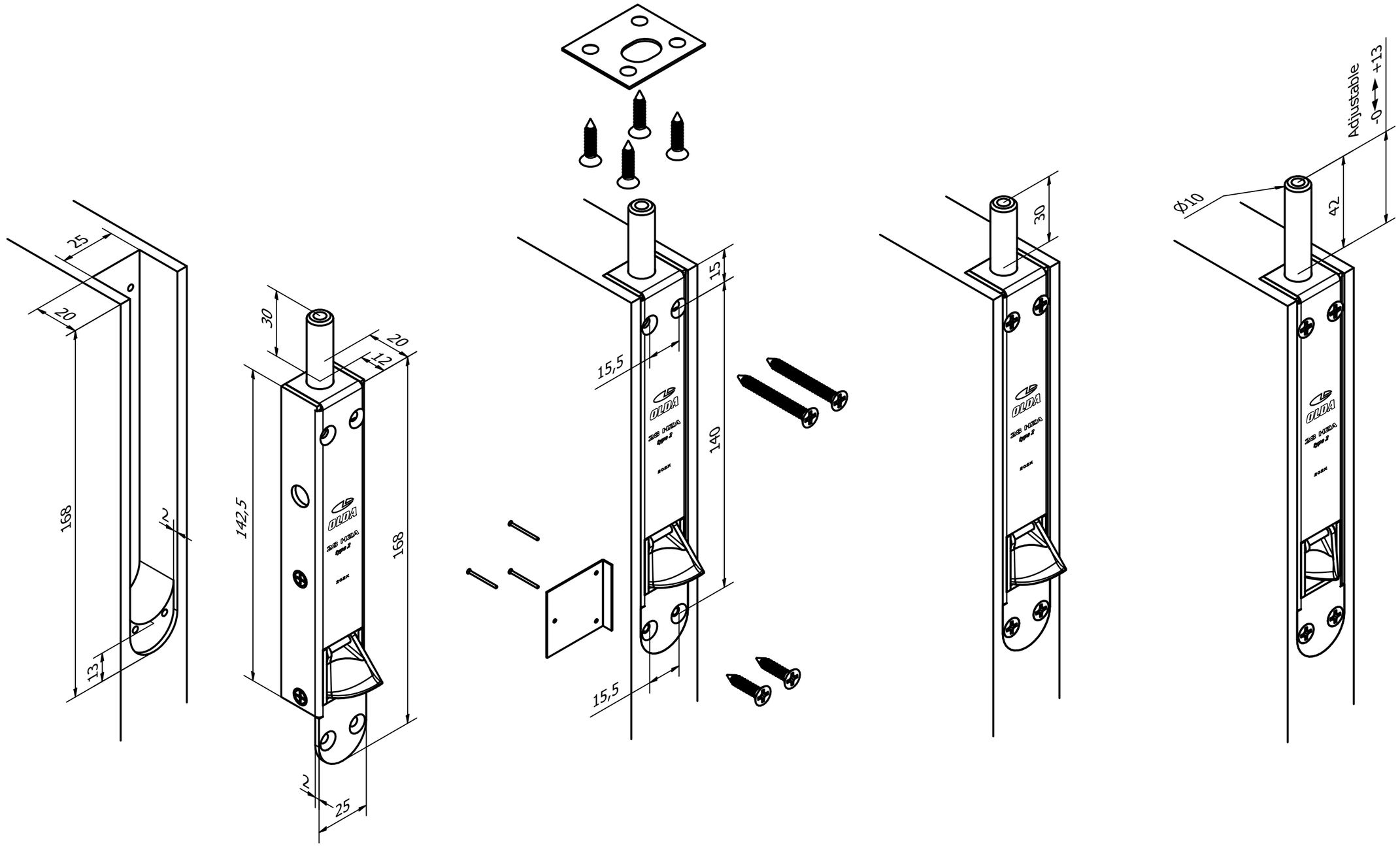

10-128-2002	C	2023-11-10

https://www.olda.com/en/fittings/automatic-flush-bolt-olda-28-hza-extended-bolt/